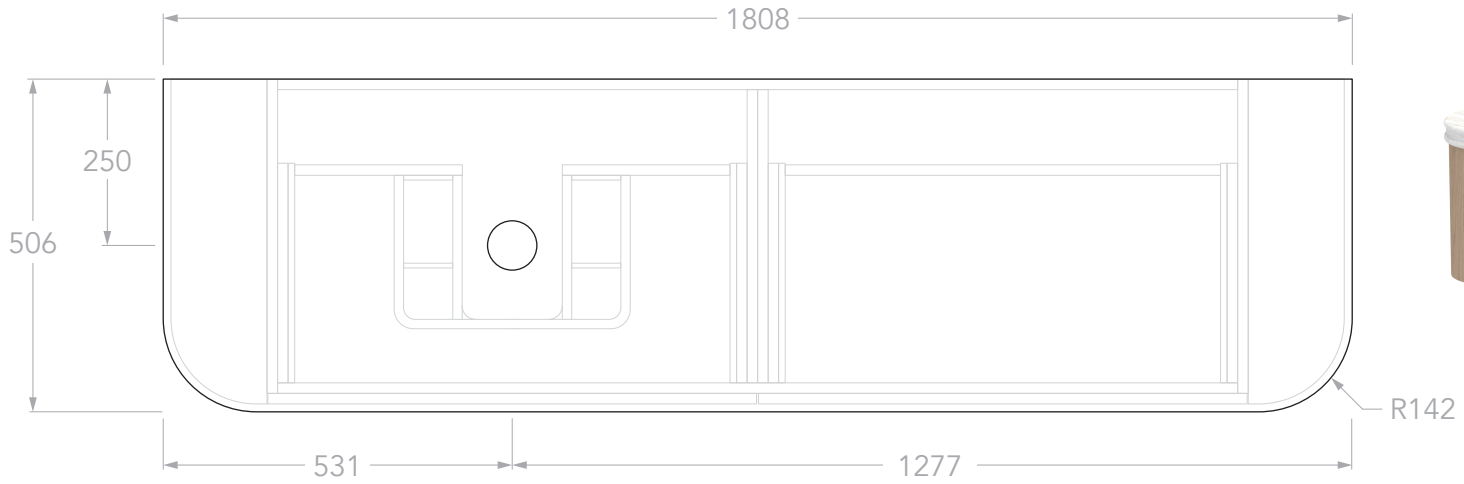

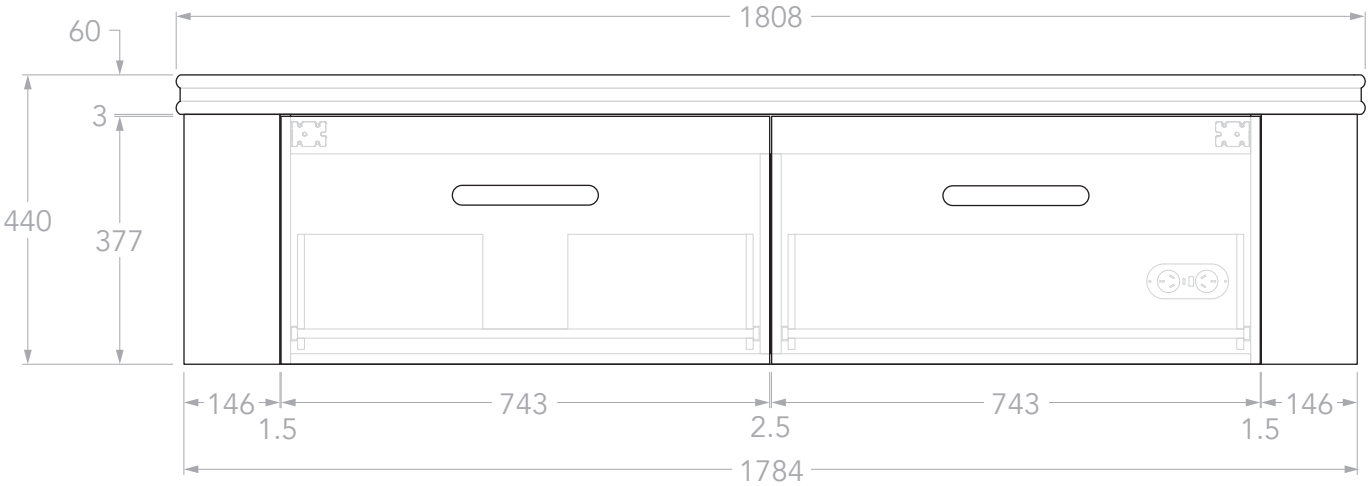

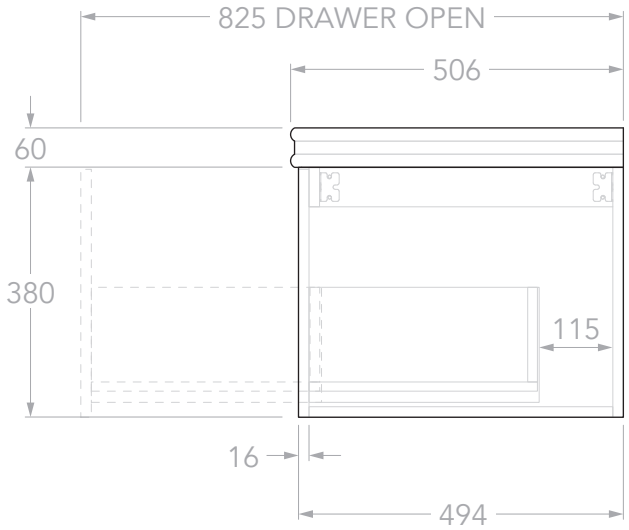

Adp

PRODUCT:	SURRY 1800 LEFT - ROYALE	TOP:	ROYALE PROFILED BENCHTOP
SIZE:	1808W x 506D x 440H	BASIN POSITION:	LEFT
CONFIGURATION:	ALL-DRAWER, WALL HUNG	CODE:	SURFAS1800WHLDU UPROYTOP
VERSION: 01	DATE: 06/06/2025		

NOTES:

DIMENSIONS ARE NOMINAL.

DO NOT DRILL OR ROUGH IN UNTIL YOU HAVE RECIEVED AND MEASURED YOUR VANITY.

ALL DIMENSIONS ARE IN MILLIMETRES. DO NOT MEASURE FROM DRAWING.